ITEM	QTY	DESCRIPTION	PART NUMBER
1	8	SQUARE NUT, M8, MINITEC	09-038064-6000-0
2	1	CARRIER IDLER SHAFT	U5000744M
3	1	CARRIER IDLER PLATE, OUTER	U5000772M
4	1	CARRIER IDLER PLATE, INNER	U5000773M
5	2	CARRIER IDLER BEARING SPACER	U5000775M
6	1	CARRIER IDLER BRG SPACER	U5000777M
7	1	CARRIER IDLER STOP BLOCK	U5000778M
8	1	CARRIER IDLER SPACER BLOCK	U5000779M
9	2	CARRIER IDLER SHAFT RETAINER	U5000780M
10	1	CHAIN NETRY, RH INNER INF	U5000783S
11	1	CHAIN ENTRY, LH INNER INF	U5000784S
12	2	ASSY, IDLER SPROCKET	U5000846M
13	13	M8 STD SPRING LOCK WASHER SS	U6002564P_EXP
14	4	M8 HIGH COLLAR LOCK WASHER SS	U6002597P_EXP
15	1	SCREW HHCS, M8x16 FULLTHRD SS	U6002762P_EXP
16	12	SCREW HHCS, M8x20 FULLTHRD SS	U6002763P_EXP
17	1	SCREW FHCS, M8x16 SS	U6002950P_EXP
18	4	SCREW FHCS, M8x20 SS	U6002951P_EXP
19	4	SCREW SHCS, M8x50 SS	U6003085P_EXP

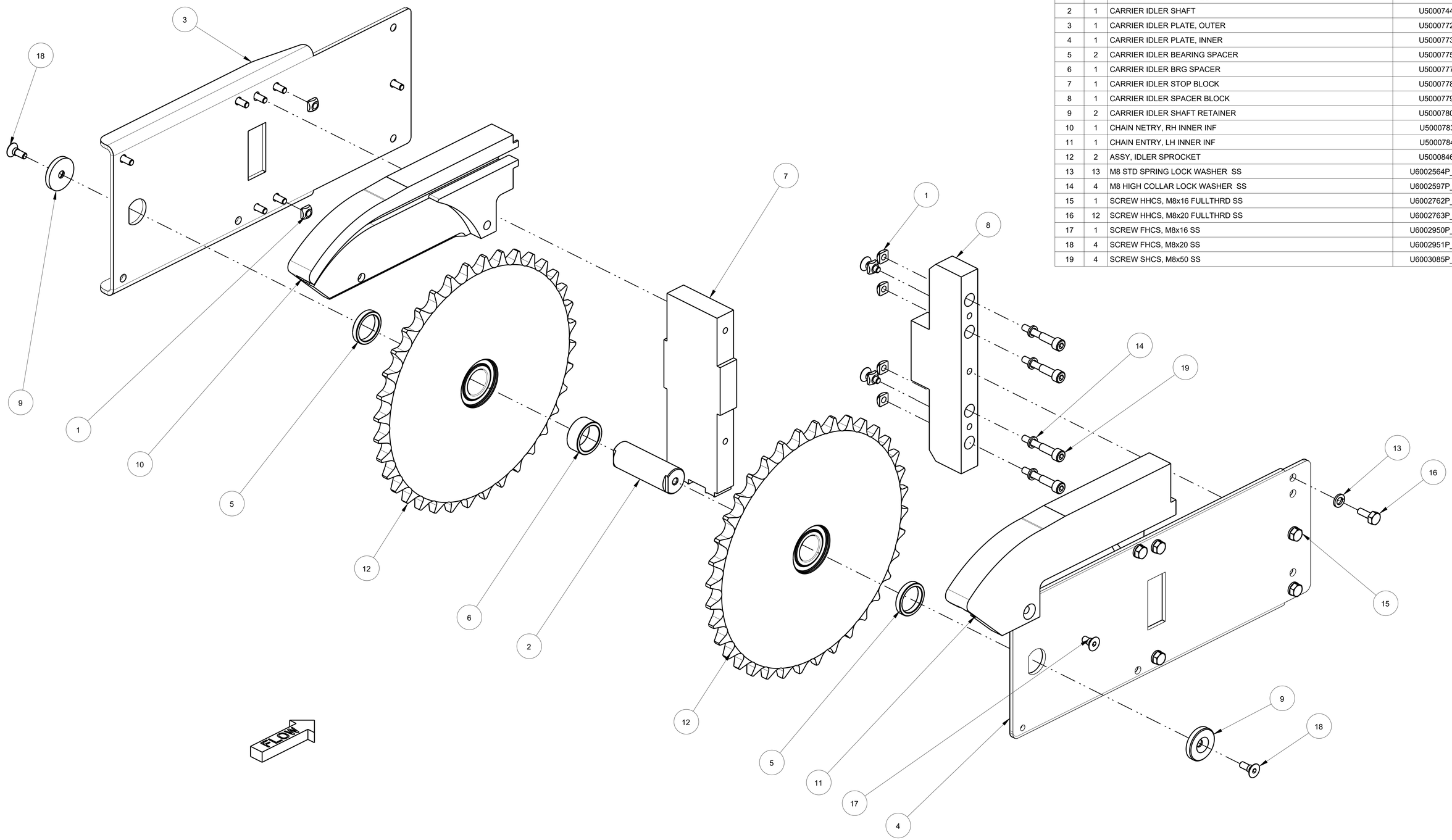

REV.	DESCRIPTION	BY	CHK'D
-	--		
-	--		
-	--		
B	REPLACED TWO (2)HEX HEAD SCREWS AT ITEMS 17&18, REF ECN002816	LPM	
		3/6/13	
A	ADDED BALLOON CALLOUTS TO ITEMS 10 & 11 NO ECN REQUIRED	KJW	
		1/9/09	
		DATE	DATE

NOTICE: THIS DRAWING AND ALL DATA, DESIGNS, STRUCTURES AND DESCRIPTIONS SHOWN THEREON ARE OUR PROPERTY. ALL PATENTABLE AND/OR COPYRIGHTABLE MATTER THEREON HAS BEEN PROTECTED BY APPLICATIONS FOR PATENT AND/OR COPYRIGHT. THIS DRAWING IS LOANED FOR A SPECIFIC PURPOSE AND MUST BE RETURNED ON DEMAND. AND MAY NOT BE COPIED, REPRODUCTED, OR DUPLICATED IN WHOLE OR IN PART, WITHOUT OUR SPECIFIC AUTHORIZATION IN WRITING.

UNLESS OTHERWISE SPECIFIED: ALL DIMENSIONS MILLIMETER, DO NOT SCALE DRAWING

GENERAL TOLERANCE: HOLE: $_{0}^{+0.07}$ H12 OTHERS: ±12

CONCENTRICITY ±0.01 PERPENDICULARITY ±0.02/CM ANGULARITY ±0.25°

BREAK SHARP CORNERS REMOVE ALL BURRS FINISHED SURFACES 3.2 √(125)

METRIC

MATERIAL: SEE BOM

FINISH: -

DRW BY: K HALEY	CHK'D : RT	ENGR. BY : W CASH
DATE: 20-Jan-04	DATE : 2-6-04	DATE : 4-1-04

TITLE: ASSY, CARRIER IDLER LH

WestRock PACKAGING SYSTEMS ATLANTA, GA, USA

SCALE	MATERIAL CODE	DRW. SIZE	DRW. N°	REV	VER 1	SHEETS
1/2	999	D	U5000771M	B		1/1